Manufactured by Belimo and available for retrofit use from MHServices.co.uk

BELIMO

Technical data sheet LMQ24A-VST

VAV-Universal, ready-to-connect damper actuator for VAV and CAV units in technical building installations

- **Torque motor 4 Nm**
- **Nominal voltage AC/DC 24 V**
- **Control communicative PP**
- **Running time motor 2.5 s**



Technical data

Electrical data	Nominal voltage	AC/DC 24 V
	Nominal voltage frequency	50/60 Hz
	Nominal voltage range	AC 19.2...28.8 V / DC 21.6...28.8 V
	Power consumption in operation	13 W
	Power consumption for wire sizing	23 VA
	Power consumption for wire sizing note	Imax 20 A @ 5 ms
	Connection supply / control	Cable 0.5 m with VST connector
	Parallel operation	No
Functional data	Torque motor	4 Nm
	Direction of motion variable	At VRU-..-BAC with Belimo Assistant App
	Manual override	with push-button, can be locked
	Running time motor	2.5 s / 90°
	Adaptation setting range variable	Triggering at VRU-..-BAC, by pressing the Adaption button or with Belimo Assistant App
	Sound power level, motor	54 dB(A)
	Mechanical interface	Universal shaft clamp 8...26.7 mm
	Position indication	Mechanically, pluggable
Safety	Protection class IEC/EN	III Safety Extra-Low Voltage (SELV)
	Degree of protection IEC/EN	IP54
	EMC	CE according to 2014/30/EU
	Certification IEC/EN	IEC/EN 60730-1 and IEC/EN 60730-2-14
	Mode of operation	Type 1
	Rated impulse voltage supply / control	0.8 kV
	Control pollution degree	3
	Ambient temperature	-30...40°C
	Ambient temperature note	Caution: +40...+50°C utilisation possible only under certain restrictions. Please contact your supplier.
	Storage temperature	-40...80°C
	Ambient humidity	Max. 95% r.H., non-condensing
	Servicing	maintenance-free
Weight	Weight	0.98 kg

Safety notes

- The device must not be used outside the specified field of application, especially not in aircraft or in any other airborne means of transport.
- Outdoor application: only possible in case that no (sea) water, snow, ice, insolation or aggressive gases interfere directly with the actuator and that is ensured that the ambient conditions remain at any time within the thresholds according to the data sheet.
- Only authorised specialists may carry out installation. All applicable legal or institutional installation regulations must be complied during installation.
- The device may only be opened at the manufacturer's site. It does not contain any parts that can be replaced or repaired by the user.
- Cables must not be removed from the device.
- Self adaption is necessary when the system is commissioned and after each adjustment of the angle of rotation (press the adaption push-button once).
- To calculate the torque required, the specifications supplied by the damper manufacturers concerning the cross-section, the design, the installation site and the ventilation conditions must be observed.
- The device contains electrical and electronic components and must not be disposed of as household refuse. All locally valid regulations and requirements must be observed.

Electrical installation

Wiring diagrams

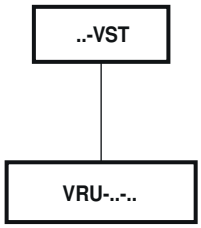

Plug-in connection with pre-assembled cable-plug unit

Installation notes

Installation notes

Installation situation

Remove actuator cable:
The connecting cable of the VST damper actuator can be removed from the VRU controller using a screwdriver (size 0...3) as shown in the illustration.

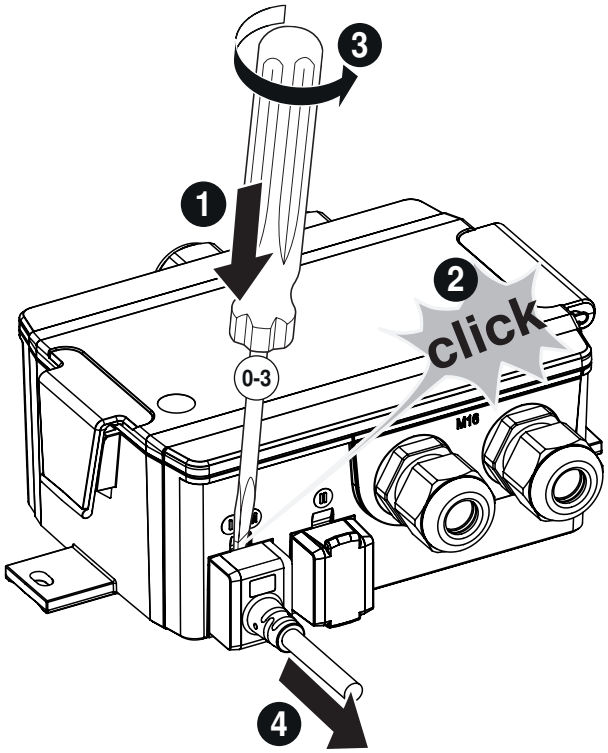

Dimensions [mm]

Clamping range

	8...26.7	≥8	≤26.7
*	8...20	≥8	≤20

Dimensional drawings

